Data Sheet

Article number: 2307084154
Description: E+G Position indicator
DD51-AN-001.0-S-C2 (orange)

Measures

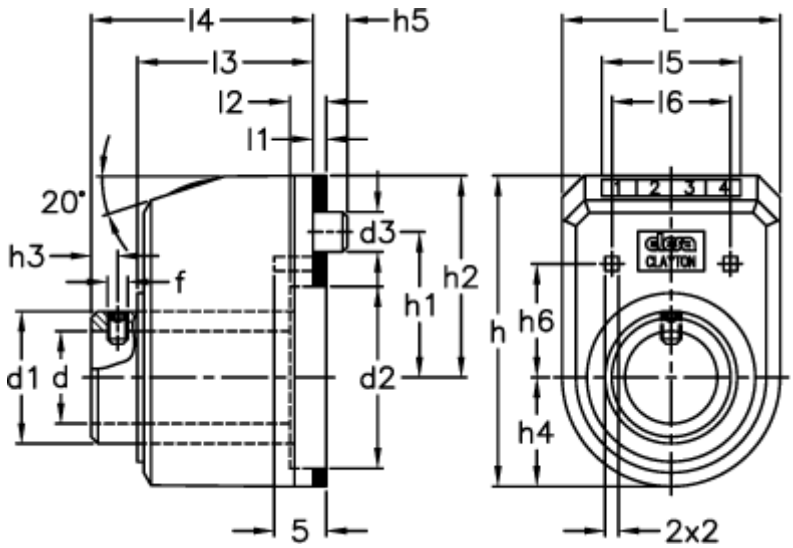

d1	= 20	h3	= 3.4	l4	= 33
d2	= 27.5	h4	= 16.5	l5	= 21
d3	= 6	h5	= 5.2	l6	= 16
d H7	= 14	h6	= 18	Max rpm	= 1500
f	= M4	L	= 33		
h	= 47	l1	= 2		
h1	= 22	l2	= 3.5		
h2	= 30.5	l3	= 26		

Product drawings and brochures of any kind may contain errors for which Brd. Klee A/S cannot be liable.